# SELLICK

# S SERIES

## ROUGH TERRAIN FORKLIFT

6,000 - 12,000 lb. Capacity

Tier 4 Diesel Engine

Rugged

Dependable

Responsive

Powered by T4 ecoMAX

# S SERIES - 6,000, 8,000, 10,000, 12,000 LBS CAPACITIES @ 24" LOAD CENTER

## Standard specifications

The S Series straight mast rough terrain forklift provides optimum operator visibility, safety and comfort while maximizing machine performance. The one-piece frame welded construction offers rugged durability. The isolated, rubber-mounted operator's compartment is designed to reduce noise and vibration. Operators benefit from greater fork visibility and control. All controls and instrumentation are close at hand.

## Engine

***Ecomax T4***

74 hp, direct injection, common rail, electronic, 4 cylinder diesel engine exceeds Tier 4 Final compliant emissions standards.

- No Diesel Particulate Filter (DPF) needed. Ultra clean burn technology allows for no Selective Catalyst Reduction (SCR) exhaust aftertreatment.
- Reduced fuel consumption.[1]
- High torque at low speeds (295 ft. lbs @ 1,200 rpm).

## Transmission

Four-speed (3-speed in S120 models) fully synchronized torque converter with power reversing integral parking brake.
Optional fully automatic powershift.

## Axles

**Drive**: Pad-mounted rigid planetary axle, torque proportioning four-pinion differential, gears are specially-shaped to transfer torque between wheels. Positive retraction brakes.

**2WD Steer**: Pin-mounted, oscillating axle with sealed tapered roller bearings. Oscillation: 14°

**Optional 4WD Steer:** Outboard planetary with torque proportioning differential. On the go engagement

## Steering

Load sense power steering with hydraulic pump assistance.
**Steer turns**: 4.5 lock to lock.

## Electrical system

**Voltage**: 12 V; alternator: 95A; battery: 1000 CCA.

## Operator compartment

Fully isolated, floating operator's compartment exceeds ANSI/ITSDF B56.6 ROPS/FOPS standard. Adjustable suspension seat with retractable seatbelt, tilt steering column, cup holder, coat hook, latched operator's manual compartment, Operator's Manual, safety decal package.

## Brake system

**Service brake**: Power-assisted braking system with enclosed oil-immersed multi-disc service brakes.

**Parking brake**: Independent parking brake system, mechanical-operated, lever-applied, manually-adjusted caliper, mounted on transmission output shaft.

[1]Up to 10% reduced fuel consumption over T4i Interim engine.

## Instruments

Multi-function Digital LCD Screen

- Fuel Level
- Engine Coolant Temperature
- System Voltage
- RPM and Hour Meter Reading
- On board diagnostics reduces downtime

Backlighting provides better visibility in dark conditions. Instrument panel swings forward for easy access to fuse panel.

## Hydraulics

Hydraulic system powered by cast iron load sense hydraulic gear pump. A positive-pressure hydraulic tank prevents impurities from entering the system.
Tank capacity: 21 gallons (79 L)
Hydraulic flow rate: 24 gpm @ 2200 rpm

## Mast assemblies

Sellick SEE-THRU® all-roller design. Two and three-stage available.
Mast sideshift: 6'' total.

## Carriages

ITA hook or shaft-type carriages equipped with 6 rollers and 4 side thrust rollers.

## Standard features

- Adjustable suspension seat
- Tilt steering column
- Retractable seatbelt
- Fuel/water separator
- Power assisted enclosed wet multi-disc brakes
- Load sense power steering
- Halogen lighting package includes two front and two rear adjustable worklights
- Safety lighting includes LED brake lights & amber warning light
- Backup alarm
- Automotive style park brake with neutral interlock
- Neutral safety start

## Optional Equipment

- Cab
- Air conditioning
- Hydraulic fork positioner
- Turn signals
- Mirrors
- AM/FM MP3 player

SELLICK

# TECHNICAL SPECIFICATIONS

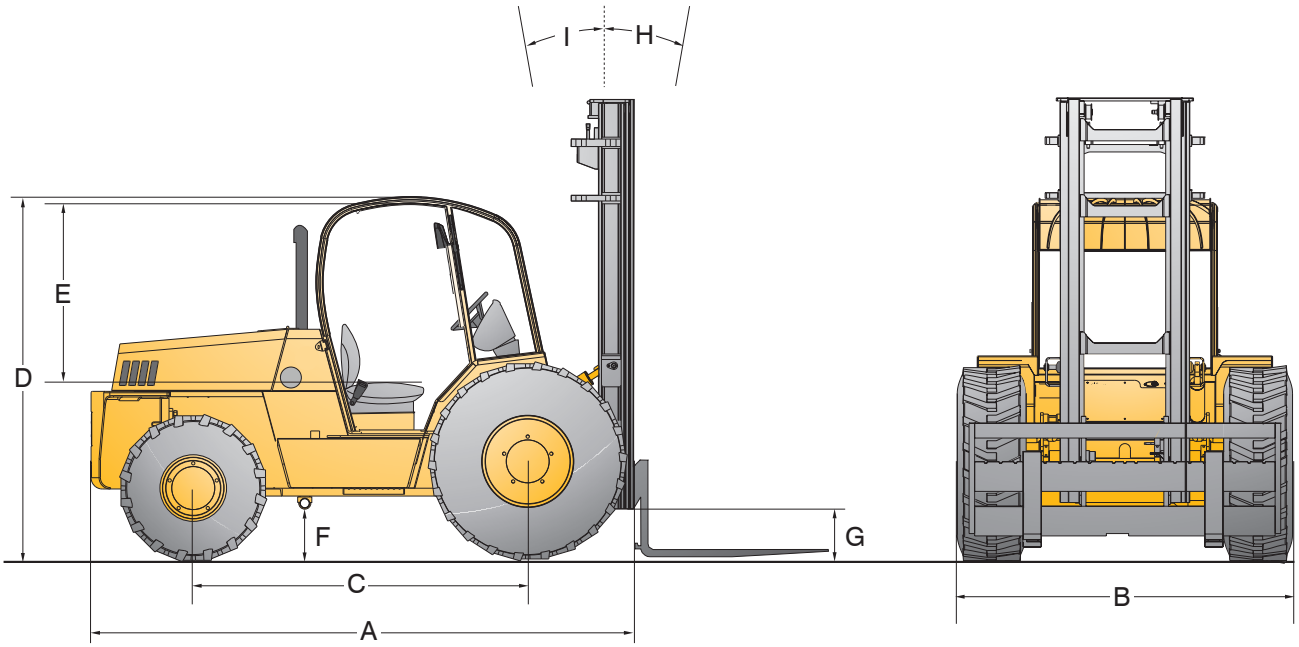


| | Ref. | S60 | S80 | S100 | S120 |
|---|---|---|---|---|---|
| Lift capacities @ 24 inch load center | | 6,000 lbs | 8,000 lbs | 10,000 lbs | 12,000 lbs |
| Total weight[2] | | 14,855 lbs | 16,235 lbs | 19,245 lbs | 20,915 lbs |
| Overall length (without forks) | A | 149”/3,785 mm | 150”/3,810 mm | 152”/3,861 mm | 159”/4,039 mm |
| Overall width | B | 89”/2,261 mm | | | |
| Wheelbase | C | 89”/2,261 mm | | | |
| Height to top of overhead guard (standard) | D | 97”/2,464 mm | | | |
| Distance from seat to overhead guard (standard) | E | 43”/1,092 mm | | | |
| Outside turning radius | | 178”/4,521 mm | | | 183”/4,648 mm |
| Aisle width 90˚ stacking | | 266”/6,756 mm | | | 271”/6,883 mm |
| Frame underclearance | F | 15”/381 mm | | | |
| Mast underclearance | G | 12”/305 mm | | | |
| Mast sideshift | | 6”/152 mm | | | |
| Mast tilt - forward | H | 45˚ | | | |
| Mast tilt - rearward | I | 12˚ | | | |
| Travel speed (standard) | | 19 mph | | | 12 mph |
| Gradeability | | 25% | | | |
| Tire type & size (standard) | | Drive (pneumatic) - 15.5 x 25 - 12 ply \| Steer (pneumatic) - 14 x 17.5 - 14 ply | | | |
| Engine model | | ECOMAX T4 | | | |
| Cylinders | | 4 | | | |
| Engine output (gross power) | | 74 hp @ 2,200 rpm | | | |
| Peak torque | | 295 ft. lbs @ 1,200 rpm | | | |
| Transmission type | | Power reversing synchromesh | | | |

*Because of our constant dedication to product improvement, all specifications are subject to change without notice.*
*— All Sellick forklifts meet or exceed all ANSI/ITSDF B56.6-2016 safety standards —*

[2]Total weight with standard operator's platform, 144'" 2-stage mast, and load backrest.

SELLICK

WWW.SELLICKEQUIPMENT.COM

# Sellick

## Working for you

Built in the Sellick tradition of quality & reliability, the S Series is supported by a network of long-established material handling dealers that provide prompt parts and service.
All Sellick products are backed by one of the best warranties in the business.

*All Sellick forklifts meet or exceed all ANSI/ITSDF B56.6-2016 safety standards.*

SELLICK

**Sellick Equipment Limited**
P.O. Box 1000/358 Erie Street North
Harrow, Ontario, Canada N0R 1G0
519-738-2255 • sellick@mnsi.net
Visit us at www.sellickequipment.com

Sold & serviced by:

2016-11 Printed in Canada 272523-F